DATASHEET

Lamp
339-9SURSUGSUBW/S1193

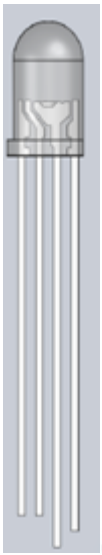

Features

- Popular T-1 3/4 package.
- High efficiency.
- Selected minimum intensities.
- Available on tape and reel.
- The product itself will remain within RoHS compliant version
- Compliance with EU REACH
  - Compliance Halogen Free.(Br＜900ppm,Cl＜900ppm, Br+ Cl＜1500ppm)

Descriptions

- The series is specially designed forapplications requiring higher brightness
- The LED lamps are available with differentcolors, intensities, epoxy, colors, etc.

Applications

- Status indicators.
- Commercial use.
- Advertising Signs.
- Computer

Copyright © 2012, Everlight All Rights Reserved. Release Date : Mar.28. 2019 Issue No: DLE-0001757 Rev.4

Ver.:4 Release Date:03/29/2019 狀態:Approved(正式發行)

Device Selection Guide

LED Part No.	Chip		Lens Color
	Material	Emitted Color	
339-9SURSUGSUBW/S1193	GaN/Al2O3	Brilliant Green	White diffused
	AlGaInP	Brilliant red	
	GaN/Al2O3	Blue	

Absolute Maximum Ratings (Ta=25℃)

Parameter	Symbol	Red	Blue	Green	Units
Forward Current	I_F	50	30	30	mA
Pulse Forward Current (Duty1/10@ 1KHz)	I_{FP}	160	100	100	mA
Operating Temperature	T_{opr}		-40 ~ +85		℃
Storage Temperature	T_{stg}		-40 ~ +100		℃
Electrostatic Discharge	ESD	2000	1000	1000	V
Soldering Temperature	T_{sol}		260		℃
Power Dissipation	P_d	120	100	100	mW
Reverse Voltage	V_R		5		V

Notes: *Soldering time≦5 seconds.

EVERLIGHT

Copyright © 2012, Everlight All Rights Reserved. Release Date : Mar.28. 2019 Issue No: DLE-0001757_Rev.4
Ver.:4 Release Date:03/29/2019 狀態:Approved(正式發行)

Electro-Optical Characteristics (Ta=25℃)

Parameter	Symbol	Color	Min.	Typ.	Max.	Unit	Condition
Luminous Intensity	IV	SUR	715	1240	1800	mcd	IF=20mA
		SUG	600	1092	1800		
		SUB	140	279	565		
Viewing Angle	2θ1/2	SUR	-----	65	-----	deg	
		SUG		65			
		SUB		75			
Dominant Wavelength	λD	SUR	620	624	628	nm	
		SUG	520	530	545		
		SUB	462	470	478		
Peak Wavelength	λp	SUR	-----	632	-----		
		SUG		518			
		SUB		468			
Spectrum half-width	Δ λ	SUR	-----	20	-----		
		SUG		35			
		SUB		35			
Forward Voltage	VF	SUR	1.8	2.0	2.6	V	
		SUG	2.8	3.2	3.6		
		SUB	2.8	3.2	3.6		
Reverse Current	IR	SUR	-----	-----	10	μA	VR=5V
		SUG			50		
		SUB			50		

*Measurement Uncertainty of Luminous Intensity: ±10%
*Measurement Uncertainty of Dominant Wavelength ±1.0nm
*Measurement Uncertainty of Forward Voltage: ±0.1V

Copyright © 2012, Everlight All Rights Reserved. Release Date : Mar.28. 2019 Issue No: DLE-0001757_Rev.4
Ver.:4 Release Date:03/29/2019 狀態:Approved(正式發行)

Typical Electro-Optical Characteristics Curves

Relative Intensity vs. Wavelength (Ta=25℃)

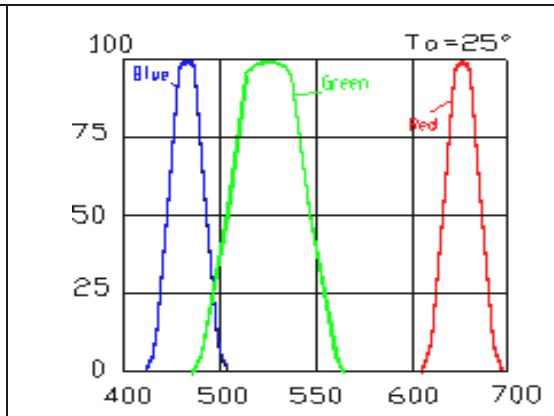

Relative Intensity vs. Angular Displacement (Ta=25℃)

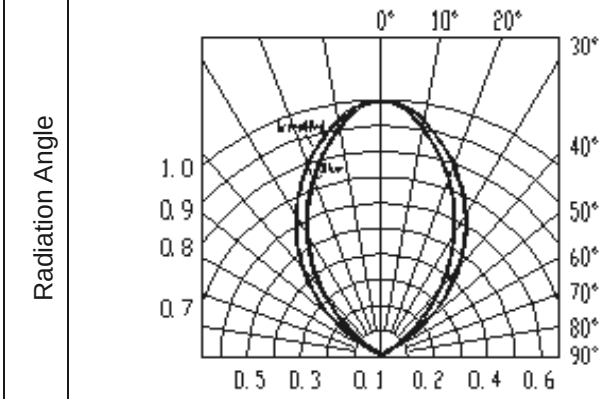

Forward Current vs. Forward Voltage (Ta=25℃)

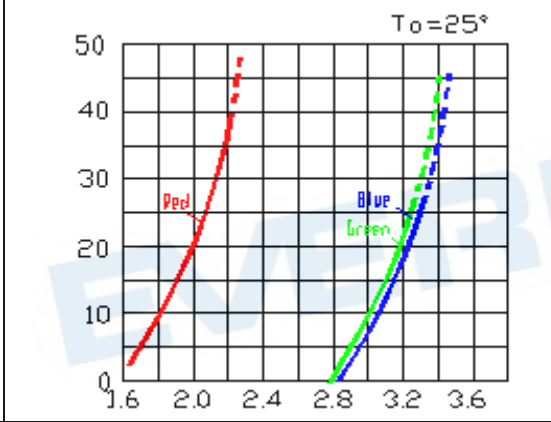

Relative Intensity vs. Forward Current (Ta=25℃)

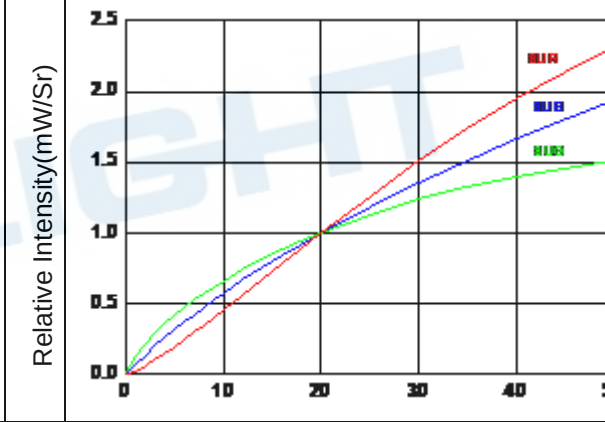

Peak Emission Wavelength vs. Ambient Temp.

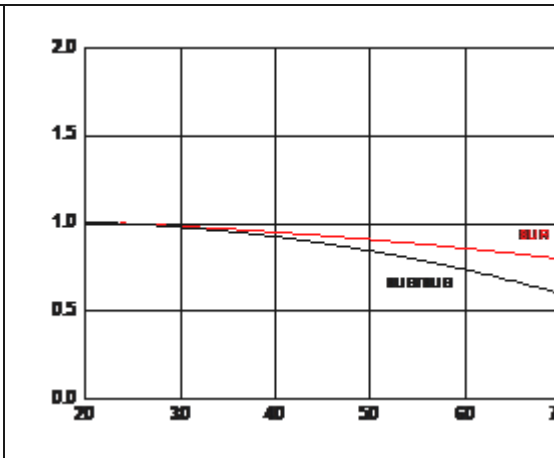

Forward Current vs. Ambient Temp.

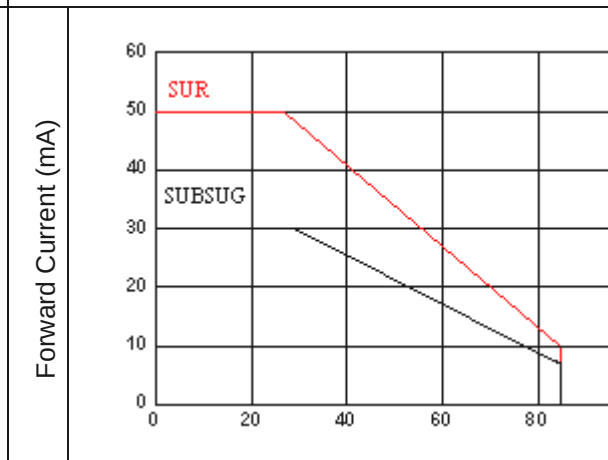

Copyright © 2012, Everlight All Rights Reserved. Release Date : Mar.28. 2019 Issue No: DLE-0001757 Rev.4
Ver.:4 Release Date:03/29/2019 狀態:Approved(正式發行)

Package Dimensions

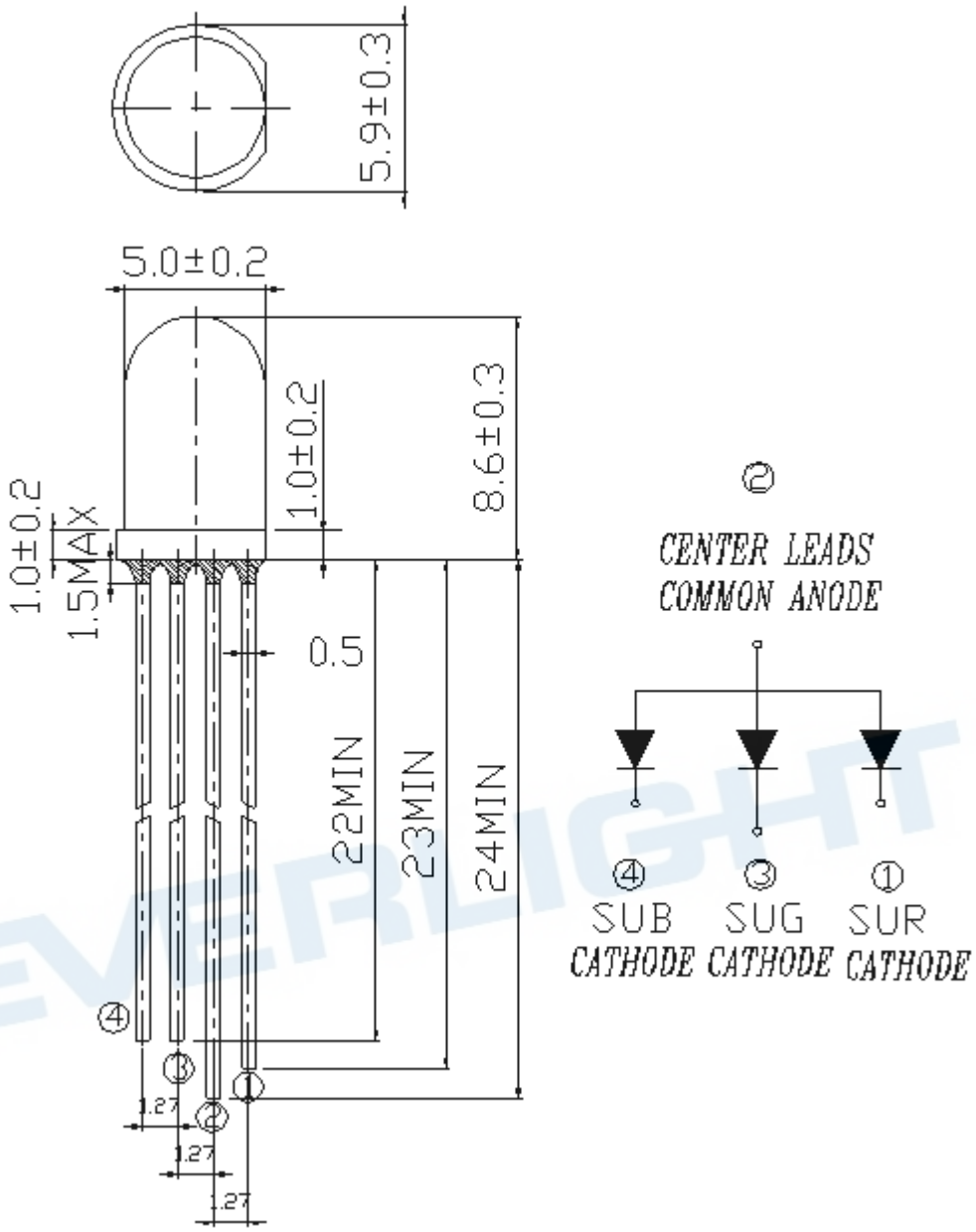

Notes:

˙All dimensions are in millimeters,tolerance is 0.25mm except being specified.
˙Lead spacing is measured where the lead emerges from the package.
˙Protruded resin under flange is 1.5mm Max LED.

Copyright © 2012, Everlight All Rights Reserved. Release Date : Mar.28. 2019 Issue No: DLE-0001757 Rev.4

Ver.:4 Release Date:03/29/2019 狀態:Approved(正式發行)

Moisture Resistant Packing Materials

Label Explanation

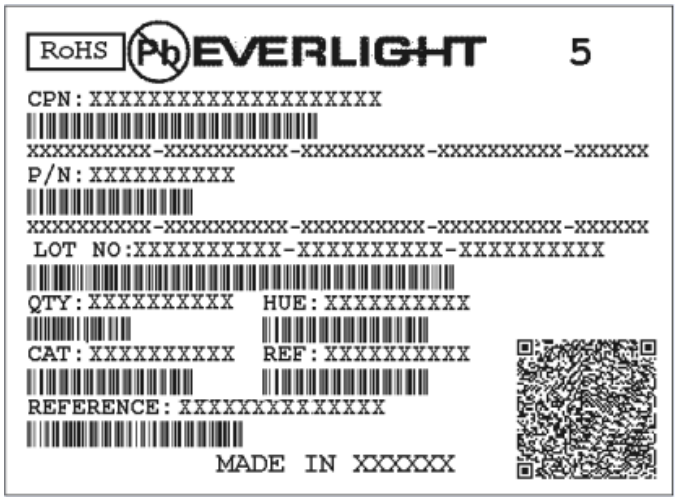

- CPN: Customer's Product Number
- P/N: Product Number
- QTY: Packing Quantity
- CAT: Ranks of Luminous Intensity and Forward Voltage
- HUE: Rank of Dominant Wavelength
- REF: Reference
- LOT No: Lot Number

Packing Specification

■ Anti-electrostatic bag

■ Inner Carton

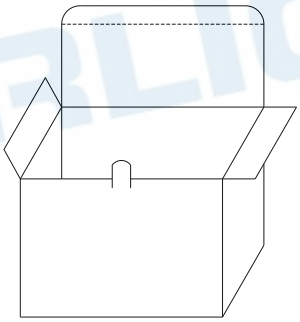

■ Outside Carton

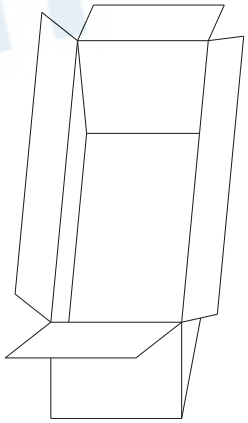

■ Packing Quantity

1. Min 200pcs to Max 500 PCS/1 Bag, 5 Bags/1 Inner Carton.
2. 10 Inner Cartons/1 Outside Carton

Copyright © 2012, Everlight All Rights Reserved. Release Date : Mar.28. 2019 Issue No: DLE-0001757_Rev.4
Ver.:4 Release Date:03/29/2019 狀態:Approved(正式發行)

Notes

1.Lead Forming

- During lead formation, the leads should be bent at a point at least 3mm from the base of the epoxy bulb.
- Lead forming should be done before soldering.
- Avoid stressing the LED package during leads forming. The stress to the base may damage the LED's characteristics or it may break the LEDs.
- Cut the LED leadframes at room temperature. Cutting the leadframes at high temperatures may cause failure of the LEDs.
- When mounting the LEDs onto a PCB, the PCB holes must be aligned exactly with the lead position of the LED. If the LEDs are mounted with stress at the leads, it causes deterioration of the epoxy resin and this will degrade the LEDs.

2.Storage

- The LEDs should be stored at 30°C or less and 70%RH or less after being shipped from Everlight and the storage life limits are 3 months. If the LEDs are stored for 3 months or more, they can be stored for a year in a sealed container with a nitrogen atmosphere and moisture absorbent material.
- Please avoid rapid transitions in ambient temperature, especially, in high humidity environments where condensation can occur.

3.Soldering

- Careful attention should be paid during soldering. When soldering, leave more then 3mm from solder joint to epoxy bulb, and soldering beyond the base of the tie bar is recommended.
- Recommended soldering conditions:

Hand Soldering		DIP Soldering	
Temp. at tip of iron	300℃ Max. (30W Max.)	Preheat temp.	100℃ Max. (60 sec Max.)
Soldering time	3 sec Max.	Bath temp. & time	260 Max., 5 sec Max
Distance	3mm Min.(From solder joint to epoxy bulb)	Distance	3mm Min. (From solder joint to epoxy bulb)

- Recommended soldering profile

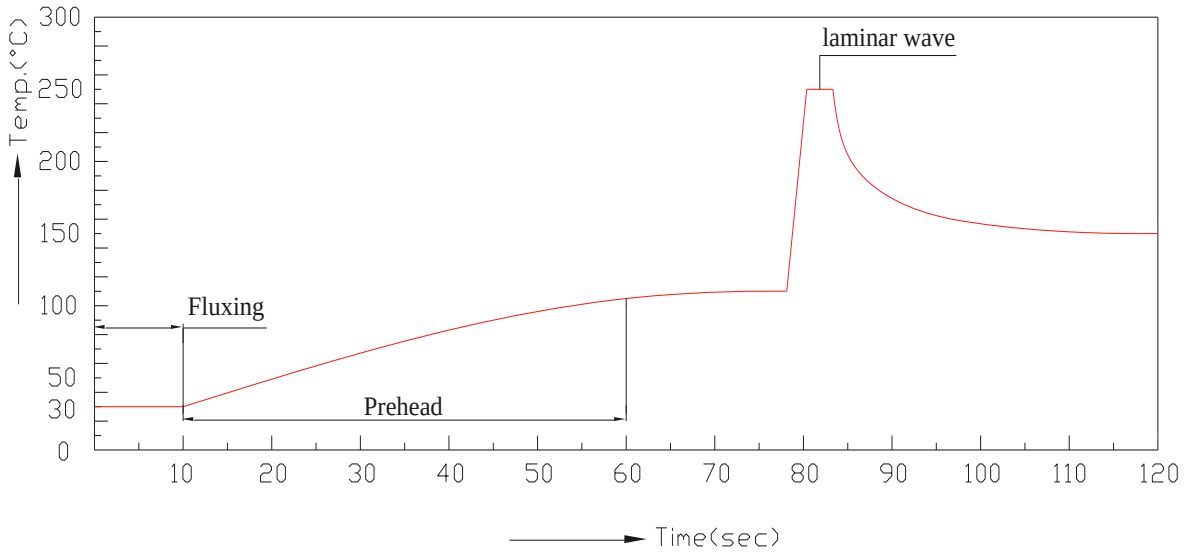

- Avoiding applying any stress to the lead frame while the LEDs are at high temperature particularly when soldering.

Copyright © 2012, Everlight All Rights Reserved. Release Date : Mar.28. 2019 Issue No: DLE-0001757 Rev.4
Ver.:4 Release Date:03/29/2019 状态:Approved(正式发行)

- Dip and hand soldering should not be done more than one time
- After soldering the LEDs, the epoxy bulb should be protected from mechanical shock or vibration until the LEDs return to room temperature.
- A rapid-rate process is not recommended for cooling the LEDs down from the peak temperature.
- Although the recommended soldering conditions are specified in the above table, dip or handsoldering at the lowest possible temperature is desirable for the LEDs.
- Wave soldering parameter must be set and maintain according to recommended temperature and dwell time in the solder wave.

4.Cleaning

- When necessary, cleaning should occur only with isopropyl alcohol at room temperature for a duration of no more than one minute. Dry at room temperature before use.
- Do not clean the LEDs by the ultrasonic. When it is absolutely necessary, the influence of ultrasonic cleaning on the LEDs depends on factors such as ultrasonic power and the assembled condition. Ultrasonic cleaning shall be pre-qualified to ensure this will not cause damage to the LED.

5.Heat Management

- Heat management of LEDs must be taken into consideration during the design stage of LED application. The current should be de-rated appropriately by referring to the de-rating curve found in each product specification.
- The temperature surrounding the LED in the application should be controlled. Please refer to the data sheet de-rating curve.

6.ESD (Electrostatic Discharge)

- The products are sensitive to static electricity or surge voltage. ESD can damage a die and its reliability.

  When handling the products, the following measures against electrostatic discharge are strongly recommended:

  Eliminating the charge

  Grounded wrist strap, ESD footwear, clothes, and floors

  Grounded workstation equipment and tools

  ESD table/shelf mat made of conductive materials

- Proper grounding is required for all devices, equipment, and machinery used in product assembly.

  Surge protection should be considered when designing of commercial products.

- If tools or equipment contain insulating materials such as glass or plastic,

  the following measures against electrostatic discharge are strongly recommended:

  Dissipating static charge with conductive materials

  Preventing charge generation with moisture

  Neutralizing the charge with ionizers

DISCLAIMER

1. EVERLIGHT reserves the right(s) on the adjustment of product material mix for the specification.
2. The product meets EVERLIGHT published specification for a period of twelve (12) months from date of shipment.
3. The graphs shown in this datasheet are representing typical data only and do not show guaranteed values.

Copyright © 2012, Everlight All Rights Reserved. Release Date : Mar.28. 2019 Issue No: DLE-0001757 Rev.4

Ver.:4 Release Date:03/29/2019 承認:Approved(正式發行)

4. When using this product, please observe the absolute maximum ratings and the instructions for using outlined in these specification sheets. EVERLIGHT assumes no responsibility for any damage resulting from the use of the product which does not comply with the absolute maximum ratings and the instructions included in these specification sheets.
5. These specification sheets include materials protected under copyright of EVERLIGHT. Reproduction in any form is prohibited without obtaining EVERLIGHT's prior consent.
6. This product is not intended to be used for military, aircraft, automotive, medical, life sustaining or life saving applications or any other application which can result in human injury or death. Please contact authorized Everlight sales agent for special application request.

EVERLIGHT

Copyright © 2012, Everlight All Rights Reserved. Release Date : Mar.28. 2019 Issue No: DLE-0001757_Rev.4
Ver.:4 Release Date:03/29/2019 狀態:Approved(正式發行)